EDESSA 02
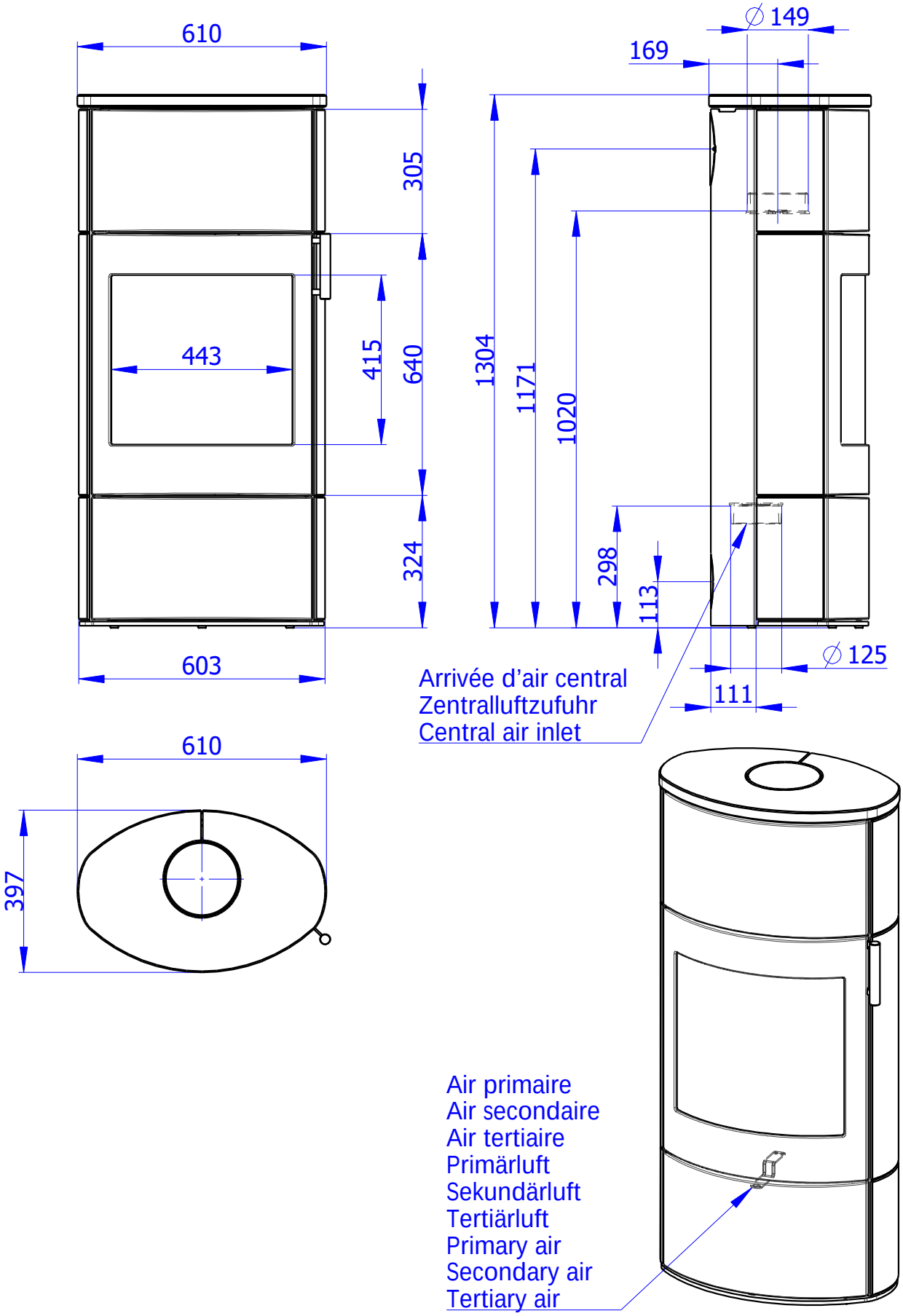
TOUT SOAPSTONE
SOAPSTONE KOMPLETT
FULL SOAPSTONE